# INSTALLATION GUIDE

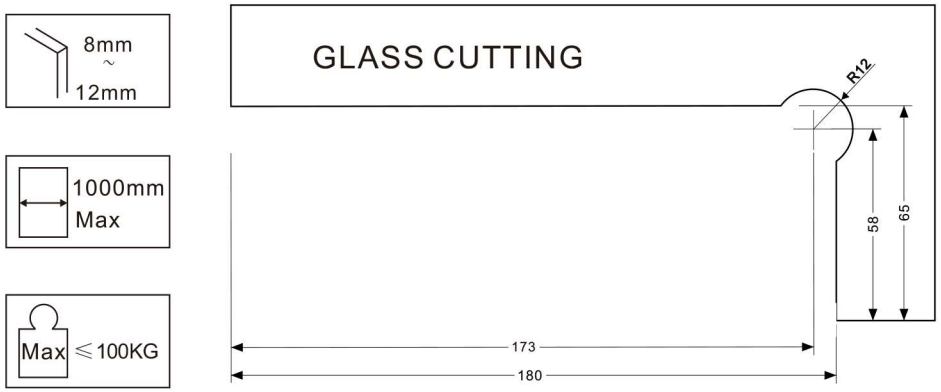


①

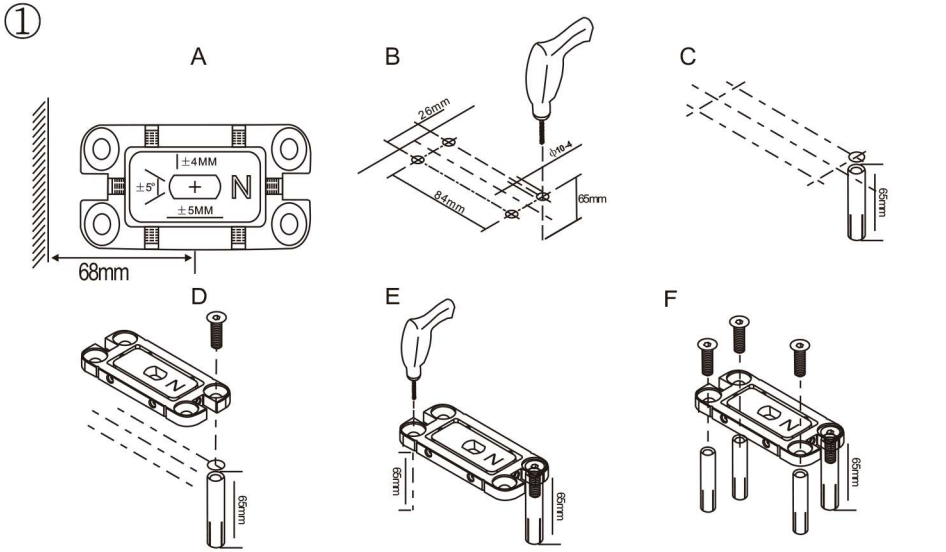


②

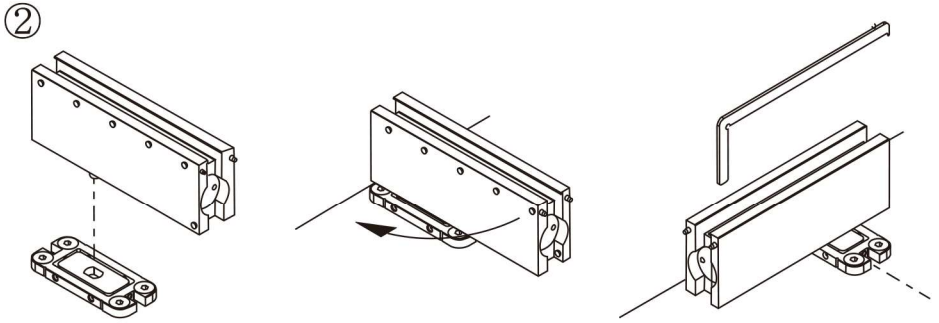

③

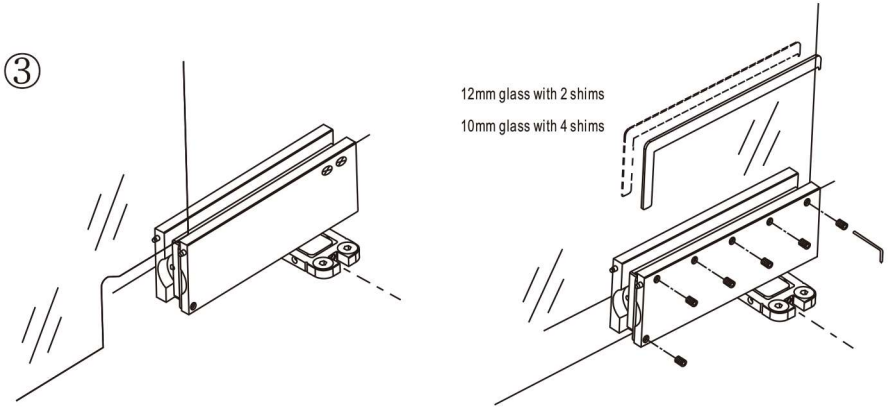


④

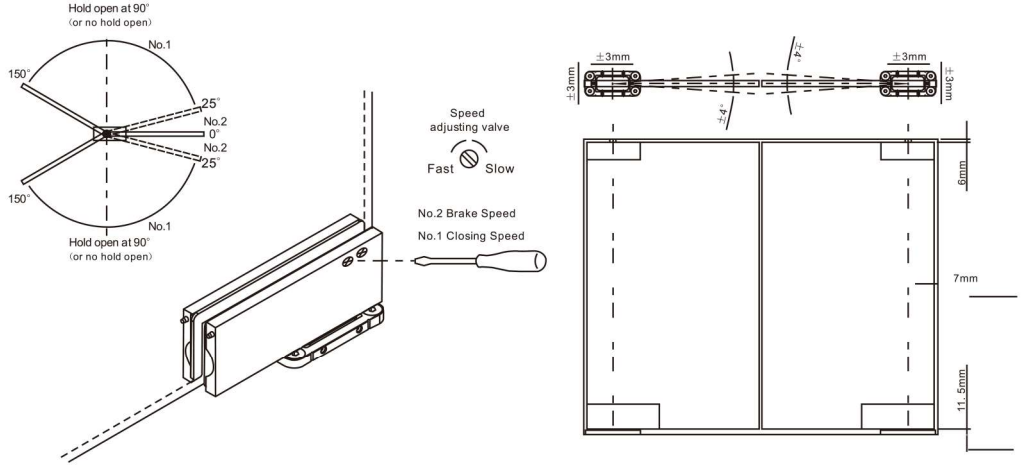


⑤

